Baumer

Passion for Sensors

Manual

Absolute Encoder with hollow shaft and Interbus

Version from 1.10

Baumer IVO GmbH & Co. KG
Dauchinger Strasse 58-62
DE-78056 Villingen-Schwenningen
Phone +49 (0)7720 942-0
Fax +49 (0)7720 942-900
info.de@baumerivo.com
www.baumer.com

05.11 · 174.02.057/2

Subject to technical and design modifications.
Errors and omissions excepted.

Contents

1 Introduction 3
1.1 Scope of delivery 3
1.2 Product assignment 3
2 Illustration of Encoder Data within Master 4
2.1 Position of the Encoder Data within the 2-word Addresses 4
2.2 Significance of the OUT Data (Data from the Master to the Encoder) 4
2.3 Significance of the IN Data (Data from Encoder to Master) 4
3 Possible Modes of Operation 5
4 Behavior of Encoder after Power ON 5
5 Parameterization 5
6 Examples 8
7 Disturbance messages 10
8 Contact description 11
8.1 Contact description for C-plug 11
8.2 Pin assignment for C-plug 11
9 Technical data 12
9.1 Part number 12
9.2 Accessories 12
9.3 Dimensions 13

Disclaimer of liability
The present manual was compiled with utmost care, errors and omissions reserved. For this reason Baumer IVO GmbH & Co. KG rejects any liability for the information compiled in the present manual. Baumer IVO nor the author will accept any liability for direct or indirect damages resulting from the use of the present information.

At any time we should be pleased receiving your comments and proposals for further improvement of the present document.

1 Introduction

1.1 Scope of delivery

Please check the delivery upon completeness prior to commissioning.
Depending on encoder configuration and part number delivery is including:

- Encoder
- Manual available as download in the Internet

1.2 Product assignment

Hollow shaft encoder

Product	Product family
GXP6H	Multiturn

2 Illustration of Encoder Data within Master

The IN as well as OUT data of the encoder are assigned 2-word addresses within the master (control). The absolute position of these word addresses depends on the position of the encoder on the Interbus ring.

2.1 Position of the Encoder Data within the 2-word Addresses

Please find below the value of the encoder data relating to the relative word address.

Word 0 (Byte 0,1)	2^{31}	2^{30}	2^{29}	2^{28}	2^{27}	2^{26}	2^{25}	2^{24}	2^{23}	2^{22}	2^{21}	2^{20}	2^{19}	2^{18}	2^{17}	2^{16}
	MSB															LSB
Word 1 (Byte 2,3)	2^{15}	2^{14}	2^{13}	2^{12}	2^{11}	2^{10}	2^{9}	2^{8}	2^{7}	2^{6}	2^{5}	2^{4}	2^{3}	2^{2}	2^{1}	2^{0}
	MSB															LSB

2.2 Significance of the OUT Data (Data from the Master to the Encoder)

	D31 D25	D24 D0
OUT Data:	Control word	Parameter

Control word:	Enable operation	Set zero offset	Specific to manufacturer	Parameter No.			
	D31	D30	D29	D28	D27	D26	D25

2.3 Significance of the IN Data (Data from Encoder to Master)

	D31 D25	D24 D0
IN Data:	Status word	Actual position value or disturbance number

Status word:	Actual position value not valid	Parameterization	Specific to manufacturer	Disturbance number in case of error otherwise 0000			
	D31	D30	D29	D28	D27	D26	D25

3 Possible Modes of Operation

Normal Operation

Control word:	Actual position value not valid D31	Set zero offset D30	Specific to manufacturer D29	Parameter No. D28	D27	D26	D25
Operation	0	0	0	0			

Parameterization

Control word:	Actual position value not valid D31	Set zero offset D30	Specific to manufacturer D29	Parameter No. D28	D27	D26	D25
Parameterization	0	0	X	1...7 or 15			
Enable operation	0>1	0	X	0			

4 Behavior of Encoder after Power ON

After power has been turned on, the following steps will take place during the initialization phase of encoder:

Test of battery tension
Switch to parameter mode
Loading of the most recent parameter data from EEPROM
Checking of parameter data as to their validity

After initialization the encoder switches to the *OPERATION* state and emits the current position value. In case of an error (battery tension too low or parameter loss), however, the encoder commutes to the *ERROR* state.

5 Parameterization

The parameters of a profile K3 encoder can be transferred via the bits 0 to 24 of the process data channel to the encoder. To this effect, the encoder has to be set to the parameterization state by a allotting parameter number not equal to zero to the bits 9 to 12 of the control word (bit 25 to 28 of the process data channel).

Parameter No. D28 D25	Function	Value range maximum	Factory setting
0 0 0 1	Resolution: Sub-parameter Steps	1..33554431	8192
0 0 1 0	Resolution: Sub-parameter Revolutions	1..4096	1
0 0 1 1	Coding of actual position value	1..6	3
0 1 0 0	Preset value	0..33554431	0
0 1 0 1	Zero offset	0..33554431	0
0 1 1 0	Offset	0..33554431	0
0 1 1 1	Reset of encoder	-	-
1 1 1 1	Measuring range	1..4096	4096

Resolution
The resolution of the encoder is adjusted via the sub-parameters „Steps“ and „Revolutions“ and the resolution is calculated according to the formula: *Resolution = Steps / Revolutions*.
The parameters Steps = 1000 and Revolutions = 3 result in a resolution of 333.333.. steps/revolution.

Coding of Actual position value
The parameter defines the coding of the actual value of the position allotted during *OPERATION* state.

	Dual code with plus/minus sign (Integer) Ascending code for sense of rotation 'right' (clockwise) with view on shaft
	Dual code with plus/minus sign (Integer) Ascending code for sense of rotation 'left' (counter-clockwise) with view on shaft
	Dual code without plus/minus sign (Unsigned) Ascending code for sense of rotation 'right' (clockwise) with view on shaft
	Dual code without plus/minus sign (Unsigned) Ascending code for sense of rotation 'left' (counter-clockwise) with view on shaft
	Gray code without plus/minus sign Ascending code for sense of rotation 'right' (clockwise) with view on shaft
	Gray code without plus/minus sign Ascending code for sense of rotation 'left' (counter-clockwise) with view on shaft

Preset Value
The value of the parameter 'Preset Value' is used to find out the zero offset.
If the control command *Set Zero Offset* (control bit D30) is triggered by the master, the parameter Zero Offset is set within the encoder to the value resulting from the following formula:

NPV = PW - API

The abbreviations stand for:

NPV	Zero offset
PW	Preset value
API	Absolute actual value of position

Remark:
The calculated NPV value is not stored in E²Prom if activated by control bit D30. Due to the limited writing cycles of the E²Prom, this value gets lost in case of power loss. However, when setting parameters, for example preset, also the current NPV value is stored in E²Prom.

Zero Offset
The parameter Zero Offset refers to the difference between the zero point of the installation and the zero point of the encoder. The actual position value is calculated according to the following formula:

PI = API + NPV

The abbreviations stand for:

PI	Actual position value (is transferred)
API	Absolute actual value of position
NPV	Zero set off

Offset
The parameter 'Offset' is an additional possibility to offset the actual position value.
The actual position value is calculated according to the following formula:

PI = API + NPV + O

The abbreviations stand for:

PI	Actual position value (is transferred)
API	Absolute actual value of position
NPV	Zero offset
O	Offset

Resetting Encoder
When the parameter 'Reset Encoder' is transmitted to the encoder, all parameters are set back to their factory setting.

Measuring Range
It is possible to adjust the entire range of the position value via the parameter 'Measuring Range'. The unit for the measuring range is the number of revolutions. If, for example, a resolution of 200 steps per revolution and a measuring range of 5 revolutions are chosen, there ensues a total range of:

Total range = Resolution * Measuring range = 200 * 5 = 1000 steps

The total range of the position value thus stretches in the process data output without plus/minus signs from 0..999 and in the process data output with plus/minus signs from -500..499.

6 Examples

Example 1: Example for a parameter transfer

	Host to Encoder			Encoder to Host			Remarks
	Control word			Status word			
	D31	D25-D28	D0-D24	D30-D31	D25-D28	D0 - D24	
1	0	0	x	0 0	0	Actual value	Normal operation
2	0	P. No.	Parameter	0 0	0	Actual value	Host sends parameter to encoder, encoder shows no reaction yet
3	0	P. No.	Parameter	0 0	0	Actual value	Host continues to wait for encoder confirmation
4	0	P. No.	Parameter	1 1	1)	Parameter	Encoder has taken over parameter and starts processing
5	0	P. No.	Parameter	1 1	1)	Parameter	Parameter processing within encoder is still running
6	0	P. No.	Parameter	1 1	P. No.	Parameter	Parameter processing has been finished, encoder remains in "Parameterization" state
7	1	0	0	1 1	P. No.	Parameter	Device control command "Enable operation " from Host to encoder. Encoder shows no reaction yet
8	1	0	0	0 0	0	Actual value	Encoder is again in "Operation" state
9	0	0	0	0 0	0	Actual value	Back again to normal operation state of both participants

1): It must be ensured not to transfer the same parameter number as already confirmed by the encoder when transmitting a parameter. It is not allowed to repeat the transfer of the same parameter without leaving the "Parameterization" state.

The parameter number must be consistent.

When transferring several parameters, steps 4 to 6 must be repeated.

It must be ensured when transmitting a parameter that the parameter number is not allotted by the parameter.

If parameters are transferred that are not valid or do not harmonize, the encoder will turn to the "Disturbance" state when trying to enable operation.

Example 2: Procedure when transferring non-harmonizing parameters

	Host to Encoder			Encoder to Host			Remarks
	Control word			Status word			
	D31	D25-D28	D0-D24	D30-D31	D25-D28	D0 - D24	
1	0	0	x	0 0	1)	Actual value	Normal operation
2	0	2	20 000	0 0	1)	Actual value	Host sends value in order to program resolution (number of revolutions)
3	0	2	20 000	0 0	1)	Actual value	Host continues to wait for encoder confirmation
4	0	2	20 000	1 1	1)	20 000	Encoder has taken over parameter and starts processing
5	0	2	20 000	1 1	1)	20 000	Parameter processing within encoder is still running
6	0	2	20 000	1 1	2	20 000	Parameter processing has been finished, encoder remains in "Parameterization" state
7	0	3	1	1 1	2	20 000	Host sends value to program coding of actual position value
8	0	3	1	1 1	2	20 000	Host continues to wait for encoder confirmation
9	0	3	1	1 1	2	1	Encoder has accepted parameter and starts processing
10	0	3	1	1 1	3	1	Parameter processing has been finished, encoder remains in "Parameterization" state
11	1	0	0	1 1	3	1	Device control command "Enable operation " from Host to encoder. Encoder shows no reaction yet
12	1	0	0	0 1	1	0	Encoder switches to "Disturbance" state, the disturbance code is "1". The actual position value is not allotted on the process data channel.

Here a try has been made to set the resolution of the encoder to 20 000 revolutions. The encoder reacts to this inadmissible parameter setting by switching to the "Disturbance" state and by emitting the disturbance code "1".

7 Disturbance messages

If there occurred an error when turning power on or during parameterization, the encoder switches to the *DISTURBANCE* state after the user has passed the device control command *ENABLE OPERATION* and allots a disturbance number to the bits D25-D28 of the status word. If an error occurs within the encoder during the *OPERATION* state (e.g.: disturbance number 15), the encoder automatically switches to the *DISTURBANCE* state.

Disturbance No. D28 D25	Significance
0 0 0 0	No disturbance
0 0 0 1	Inadmissible parameter from Master
0 0 1 0	Unknown parameter number
0 0 1 1	Parameter loss
1 1 0 1	Error when storing into EEPROM
1 1 1 0	Warning: Battery tension too low
1 1 1 1	Faulty value of encoder disk

Status word at disturbance:

Status word:	Actual posit. vakue not valid	Parameter-izat ion	specific to manu-factorer	Disturbance no.			
	D31	D30	D29	D28	D27	D26	D25
Disturbance	1	0	X	1...3 or 13...15			

Sign a disturbance:

Status word:	Enable operation	Set zero offset	specific to manu-factorer	Disturbance no.			
	D31	D30	D29	D28	D27	D26	D25
Enable operation	0>1	0	X	0			

8 Contact description

8.1 Contact description for C-plug

D01, $\overline{D01}$ DI1, $\overline{DI1}$	Incoming long-distance bus (A1) galvanically separated from remaining encoder electr.
GNDI	Galvanically separated reference mass for incoming long-distance bus (A1). Models without electrical isolation combined with GND.
UB GNDB	Contacts for encoder supply incorporated within the bus (A1), UB = 10...30 VDC. Current load max. 700 mA
D02, $\overline{D02}$ DI2, $\overline{DI2}$	Relaying long-distance bus (W1)
GND	Reference mass for relaying long-distance bus (W1)
UB GNDB	Contacts for encoder supply within bus (W1), UB = 10 ... 30 VDC. Connected internally with UB/GND B from A1
PE	Screening combined with encoder housing
$\overline{RBST}$	Recognition of further bus users Open contact: Last user Contact to GND: User X

8.2 Pin assignment for C-plug

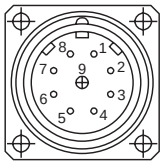

Incoming interface
(pin)

Pin	Assignment
1	D01
2	$\overline{D01}$
3	DI1
4	$\overline{DI1}$
5	GNDI
6	PE
7	UB
8	GNDB
9	–

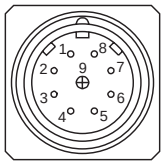

Outgoing interface
(socket)

Pin	Assignment
1	D02
2	$\overline{D02}$
3	DI2
4	$\overline{DI2}$
5	GND
6	PE
7	UB
8	GNDB
9	$\overline{RBST}$

9 Technical data

9.1 Part number

Order no.	Hollow shaft
0	Ø 14 mm, grub screw
1	Ø 12 mm, grub screw
2	Ø 14 mm, clamping ring
	Voltage
10	10 ... 30 VDC with electr. isolation
	Connection
A1	2 x 9 pins with C-plug, radial
	Software
01	Program K3

GXP6H. □ □□ □□ □□

9.2 Accessories

Order no.

Z 153.B01 Connector socket, 9 pins
Z 153.S01 Connector pin, 9 pins
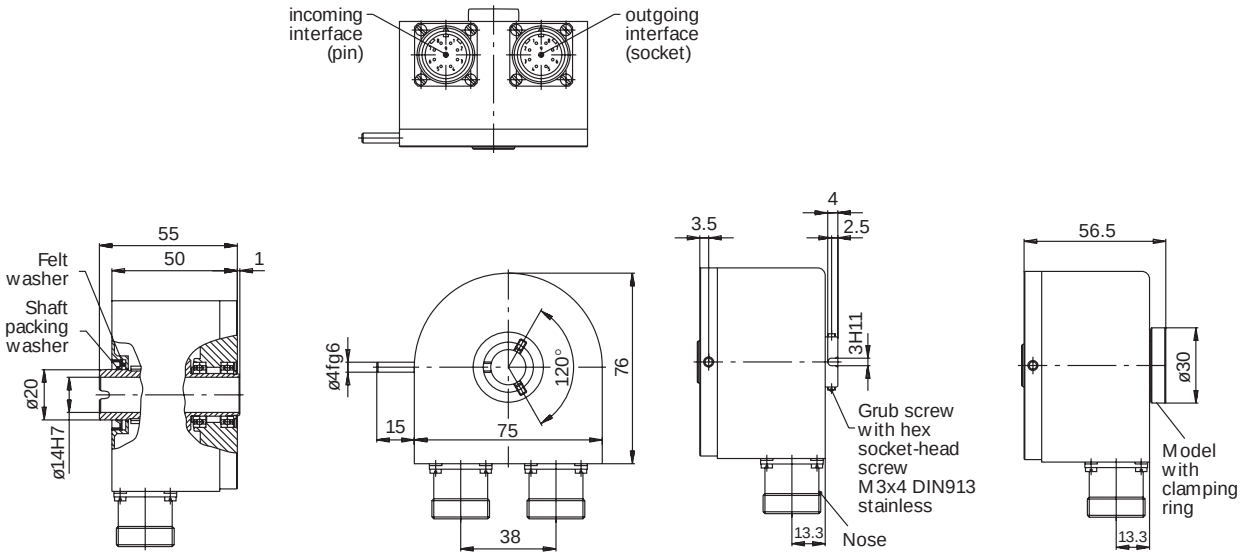
9.3 Dimensions